"INTELLIGENT TRAFFIC CONTROL"

Shubham K. Pachpor (shubham.pachpor123@gmail.com), Gaurav M. Pagar (gauravpagar07@gmail.com), Ashwini D. Patil (ashwinidpatil12@gmail.com)

Dr. D.Y. Patil college of engineering, Ambi.

ABSTRACT

Ineffective traffic light control systems in major cities of developing countries especially in India has resulted in traffic congestion problems. These fixed timing signals are not desirable because they do not take into account the actual road conditions thereby producing the traffic jam problems. The delays introduced by these signals are adversely affecting the quality of life as well as environment. People lose time, miss opportunities and get frustrated. In addition, these traffic congestion problems are having a deep impact on companies' production which has lead to economic crises in the country.

I. INTRODUCTION

Ineffective traffic light control systems in major cities of developing countries especially in India has resulted in traffic congestion problems. These fixed timing signals are not desirable because they do not take into account the actual road conditions thereby producing the traffic jam problems. The delays introduced by these signals are adversely affecting the quality of life as well as environment. People lose time, miss opportunities and get frustrated. In addition, these traffic congestion problems are having a deep impact on companies' production which has lead to economic crises in the country.

One solution to overcome these problems is to construct new roads, under-passes, fly-over; enhance the public transport and introduce intercity train. But the availability of free space impose a serious problem in making new infrastructure and also the environmental damage due to these developments have to be considered. For this reason, there is a need to improve existing traffic light system in order to manage the traffic flow in smooth and efficient way. This leads to the development of an adaptive traffic control system which can monitor traffic conditions and adjust the timing of traffic lights according to the actual road conditions.

In order to overcome these deficiencies, many researchers have applied image processing and computer vision techniques for making the traffic system fully adaptive and dynamic.

In this project, we have presented an algorithm based on image processing for monitoring the traffic flow on roads.

Image processing based adaptive traffic control system consists of four important components: a camera mounted on a camera drive motor, which is a DC motor and installed at each intersection, a PC with MATLAB for image processing tasks, and ARM LPC2138 processor for controlling DC motor and traffic light signals. After the images have been captured and processed by PC, on time is assigned to each signal according to its traffic density. Each intersection is assigned a unique code which can turn the signal green.

Use of Traffic cameras is a cost effective solution and is flexible for monitoring traffic They can be networked and remotely controlled and can cover areas of interest with its pan and zoom facility enabling coverage in a larger area. Hence, they are used for vehicle tracking particularly for vehicle counts and speed measurements.

Avoiding Jam:

Image processing technique is used to know the traffic on road. Images from camera are stored in a special format. Images are taken at a particular duration of time. The empty road image is compared with the images of traffic taken in a certain time pixel by pixel. Pixels which are different are getting filled with red colour. In this way the density of traffic is known. If the image shows full red for more than 10 minutes, it triggers the light on the street light(preferably red) indicating that there is a jam ahead. The poles near the diverging roads are mainly considered so that the driver has the option to switch roads, thus avoiding any further addition to the jam.

Traffic Signal Timing Control:

Electronic traffic counter are installed to count the number of traffic on a particular road. The traffic light is synced to it. The main aim is that time will be saved if there is less number of vehicles on a particular time or a particular day as the traffic light will show red colour for a short time if the traffic is less thus avoiding the people to wait Unnecessarily. Moreover the flash light will be seen by everyone.

OBJECTIVES OF PROJECT:

- To make adaptive traffic system.
- To measure the density of vehicles on the road.
- To save the valuable time of user.
- To make the transportation system more flexible.

II. LITERATURE SURVEY

We have gone through different types of research carried out by various authors. However, few relevant and significant works are reviewed here.

- Author [1] Ninad Lanke , Sheetal Koul (International Journal of Computer Applications (0975 – 8887) Volume 75– No.7, August 2013).

Smart Traffic Management System.

Have established that, Each vehicle can be installed with a RFID tag. This RFID tag would store all the information regarding the vehicle such as the vehicle number, etc. RFID tags can be used in identifying each vehicle uniquely and also help the driver to receive some traffic messages. The existing signaling system can be coupled with the RFID controller. each signal can have the information regarding every vehicle that passes by it. Thus when a vehicle passes by a signal, the signal can automatically keep the count of the vehicles passing by it, and help in detection of traffic congestion. Each signal should be stored with a threshold value for which it should be red and green. Now depending upon the frequency of the vehicles passing by the signal per second, the timer can be dynamically controlled. Each controller of the signal should be stored with a value of minimum frequency of the vehicles passing by the signal. As soon as this minimum frequency is reached, the controller should send a command to the signal to turn red. Thus the signal is controlled dynamically. For example, suppose for a signal, maximum time for which a signal can be red is set to be 30 seconds and maximum time for which the signal can be green is set as 20 seconds. The controller is stored with the value of minimum frequency of vehicles passing by it per second as 5. Now suppose the signal turns green, the timer starts with a maximum value of 20. Initially the frequency of the vehicles passing the signal per second is 10, after 10 seconds this frequency reduces to 5, and then automatically the RFid controller sends a command to the signal to turn red. Thus the signal turns red and its adjacent signal in that junction turns green. This process continues in a cycle.

The disadvantage of this methodology is that the RF id tag has to be installed in each vehicle to access this service or to use this service, and if there is any vehicle which doesn't having RFid the service is not provided to that vehicle because that vehicle remains undetected and such vehicle has to wait until the arrival of next vechicle with RFid tag.

- Author [2] P.M. Xavier, Raju Nedunchezhia (IJRET: International Journal of Research in Engineering and Technology (eISSN: 2319-1163 | pISSN: 2321-7308) Volume: 03 Special Issue: 15 | Dec-2014 | IWCPS-2014)

A comparative study on road traffic management systems.

This author have given a comparative study of existing systems such as GPS, Infrared, RF id, etc for vehicular traffic management and to suggest the use of mobile signals for vehicular traffic management.

And accordingly, his theory based on the angle of arrival, observed time difference arrival, time difference of arrival of mobile phones which is detected by the nearby base stations.

But due to wireless environment, obstacles, atmospheric particles, scattering etc. can cause change in angle of incidence thus leading to errors. AOA cannot be accurately determined if the base stations are in straight line, Usage of this method in indoor applications may lead to considerable inaccuracy.

- Author [3] Farheena Shaikh, Dr. Prof. M. B. Chandak (IOSR Journal of Computer Science (IOSR-JCE) -2014 e-ISSN: 2278-0661, p-ISSN: 2278-8727 PP 24-27)

An Approach towards Traffic Management System using Density Calculation andEmergency Vehicle Alert.

According to the concept of this author, emergency vehicle alert that will transmit the vehicle geo-location which will then be received by the road side unit at signal and it will start the green light and this light will be in ON state till the vehicle is within the GPS range. This will be useful for the emergency vehicles such as Fire Brigade, Ambulance, Police cars .

This research is more focused on priority based signalling. and smart congestion avoid system for a emergency vehicles.

- Author [4] Osigwe Uchenna Chinyere, Oladipo Onaolapo Francisca, Onibere Emmanuel Amano.(International Journal of Advances in Engineering & Technology, Vol. 1, Issue 5, pp. 47-57 Nov 2011.©IJAET ISSN: 2231-1963)

Design and simulation of an intelligent traffic Control system.

This methodology was obtained as a hybrid of two standard methodologies: The Structured System Analysis and Design Methodology (SSADM) and the Fuzzy Based Design Methodology.

this paper uses fuzzy controller and fuzzy logic which is nothing but the mathematical calculations again which makes it complicated and The system will only work for an isolated four-way junction with traffic coming from the four cardinal directions.

Traffic only moves from the North to the South and vice versa at the same time; and at this time, the traffic from the East and West is stopped. In this case, the controller considers the combination of all the waiting densities for the North and south as that of one side and those of the east and west combined as another side.

- Author [5] Dr Pramod Kumar Awasthi (SSRG International Journal of Civil Engineering (SSRG-IJCE) – volume 3 Issue 7 – July 2016).

Smart Traffic Management System: The Back Bone of Smart City.

Have established that the Imagination of smart city is next to impossible with busy traffic system. Smooth traffic flow not only make environment clean but also it helps to make surrounding pollution free. Revolution in auto mobile industries increased the load on road traffic. The Traffic congestion is a major problem of many cities of India. The

traffic congestion can be seen not only in urban areas, in rural areas but also in national highways. It adversely impact on our economy and environment and health. Poor infrastructure and poor law enforcement are the root cause of traffic congestion. To move smooth traffic in a smart city, there are many methods like video data analysis, infrared sensors, inductive loop detection, magnetic detectors, acceleration detectors, etc. which can utilize to solve the problem of traffic congestion.

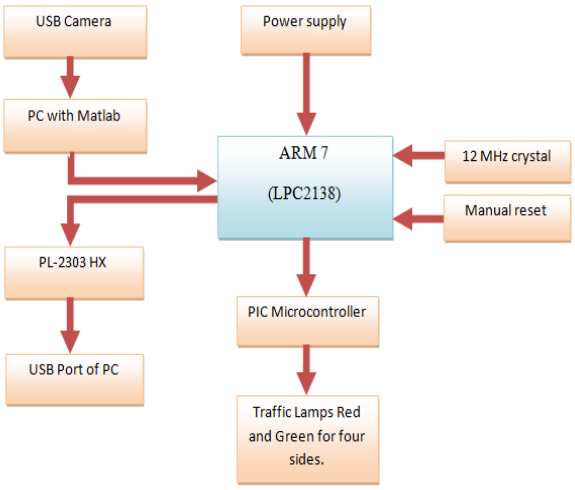

Fig: Block Diagram

III.BLOCK DIAGRAM DESCRIPTION

- ARM processor LPC2138:

Here, in our project arm processor is used to drive camera, which capture images, and send them to computer to decide density of traffic and displays number of vehicles using matlab. It is having two transmitters and receivers, and one of the transmitters & receivers is connected to computer using max232 IC for making connection between computer and ARM compatible for transfer of result of image processing. It is also connected to traffic signals and LCD to display calculated time period for green signal. The LPC2138 requires supply of 3.3V for proper functioning, which provided by the IC LM117.

- PIC microcontroller:

A processor is implemented on a very large scale integration chip peripheral chips are needed to construct the product. The pic is used in project for running the subroutine program which is used to control the traffic lights. It will receive the three type of the data from the Arm and runs the subroutine accordingly.

- Relay Drive:

Relay will control electrical circuit by opening and closing contacts. Relays are generally used to switch smaller current in control circuit and relay driver will drive the DC motor as well as the signals. We used relay here are 10amp capacity.

- Max232 IC:

It works as a connector which is used for compatible connection between computer and ARM processor, using cable like RS232 for serial communication.

IV.METHODOLOGY

HARDWARE USED:

ARM 7 (LPC 2138):

- Fast GPIO ports enable port pin toggling up to 3.5 times faster than the original LPC213x Dedicated result registers for ADC(s) reduce interrupt overhead.
- UART0/1 include fractional baud rate generator, auto-bauding capabilities and Handshake flow-control fully implemented in hardware.
- Additional BOD control enables further reduction of power consumption.
- 16/32-bit ARM7TDMI-S microcontroller in a tiny LQFP64 or HVQFN64 package.
- 8/16/32 kB of on-chip static RAM and 32/64/128/256/512 kB of on-chip flash program Memory. 128-bit wide interface/accelerator enables high-speed 60 MHz operation.
- In-System Programming/In-Application Programming (ISP/IAP) via on-chip boot loader Software. Single flash sector or full chip erase in 400 ms and programming of 256 B in 1 ms.
- Single-chip 16/32-bit microcontrollers; 32/64/128/256/512 kB
- ISP/IAP flash with 10-bit ADC and DAC
- Single-chip 16/32-bit microcontrollers
- One (LPC2131/32) or two (LPC2134/36/38) 8-channel 10-bit ADCs provide a total of up to 16 analog inputs, with conversion times as low as 2.44 as per channel.
- Single 10-bit DAC provides variable analog output (LPC2132/34/36/38).
- Two 32-bit timers/external event counters (with four captures and four compare Channels each), PWM unit (six outputs) and watchdog.
- Low power Real-time clock with independent power and dedicated 32 kHz clock input.
- Multiple serial interfaces including two UARTs (16C550)
- I2C-bus (400 Kbit/s), SPI and SSP with buffering and variable data length capabilities.
- Vectored interrupt controller with configurable priorities and vector addresses.
- Up to forty-seven 5 V tolerant general purpose I/O pins in tiny LQFP64 or HVQFN package.
- Up to nine edge or level sensitive external interrupt pins available.
- 60 MHz maximum CPU clock available from programmable on-chip PLL with settling time of 100 ms.
- On-chip integrated oscillator operates with external crystal in range of 1 MHz to 30 MHz and with external oscillator up to 50 MHz
- Power saving modes include idle and Power-down.
- Individual enable/disable of peripheral functions as well as peripheral clock scaling down for additional power optimization.
- Processor wake-up from Power-down mode via external interrupt or BOD.

- Single power supply chip with POR and BOD circuits:

CPU operating voltage range of 3.0 V to 3.6 V with 5 V tolerant I/O pads.

PIC 18F:

- High current sink/source 25 mA/25 mA
- Three external interrupt pins
- Timer0 module: 8-bit/16-bit timer/counter with 8-bit programmable prescaler
- Timer1 module: 16-bit timer/counter
- Timer2 module: 8-bit timer/counter with 8-bit period register (time-base for PWM)
- Timer3 module: 16-bit timer/counter
- Secondary oscillator clock option - Timer1/Timer3
- 100,000 erase/write cycle Enhanced FLASH program memory typical
- 1,000,000 erase/write cycle Data EEPROM memory
- FLASH/Data EEPROM Retention: > 40 years
- Self-reprogrammable under software control
- Power-on Reset (POR), Power-up Timer (PWRT) and Oscillator Start-up Timer (OST)
- Watchdog Timer (WDT) with its own On-Chip RC oscillator for reliable operation
- Programmable code protection
- Power saving SLEEP mode
- Selectable oscillator options including:

- 4X Phase Lock Loop (of primary oscillator)
- Secondary Oscillator (32 kHz) clock input

- Single supply 5V In-Circuit Serial Programming via two pins
- In-Circuit Debug (ICD) via two pins

- RS 232

RS 232 IC is a driver IC to convert the µC TTL logic (0-5) to the RS 232 logic

(+-9v).

Many device today works on RS 232 logic such as PC, GSM modem, GPS etc. So in order to communicate with such devices we have to bring the logic levels to the 232 logic

(+/-9v).Here as we can see the RS 232 chip has 2 pairs of TTL and 232 logic.

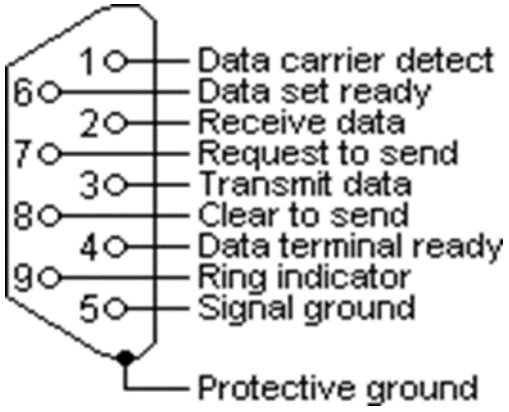

Fig: PIN diagram of RS232

- MAX 232 Driver IC

Pair 1: Pin 7, 8,9,10 of RS 232

Pair 2: Pin 11,12,13,14 of RS 232

We can use any one pair in our project either 7, 8,9,10 pair or 11,12,13,14 pair. If we require 2 serial ports then Depending on the requirement of the project we have to use both the pair in the same project.

The µC works on TTL logic (0-5 v). So to convert the TTL logic to 232 logic we use 4 capacitors connected to the RS232 IC. These capacitors are called charge pumps used to convert the TTL voltage to the +/- 9 v swing required by the 232 IC.

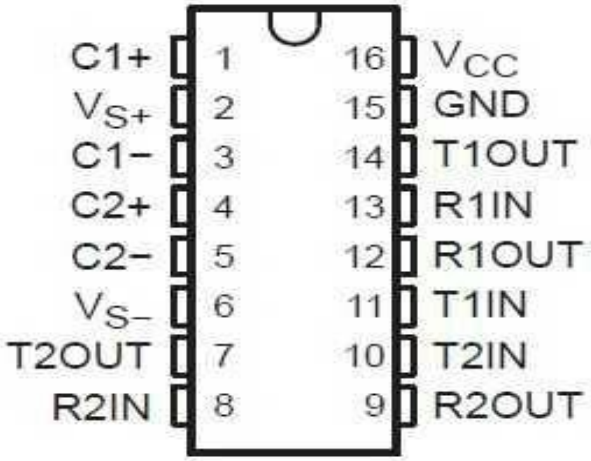

Fig: PIN diagram of MAX 232

SOFTWARE TOOLS

- Keil µVision 3

Keil µVision 3 tool is designed to solve the complex problems that embedded software developers' face. When starting a new project, simply the Microcontroller needs to be selected and the µVision sets all compilers, assemblers, linker, and memory for the programmer. The Keil µVision debugger accurately simulates on chip peripherals (UART Interrupts, I/O ports, A/D converter/D/A converter, etc) µVision supports multi-project workspaces that allow us to work with multiple projects at the same time. When working with a workspace, the project workspace window displays the project included in the workspace.

- Flash Magic

Flash Magic is windows software from the embedded systems Academy that allows easy access to all the ISP features provided by the devices. These features include:

- Erasing the Flash memory (individual blocks or the whole device).
- Programming the Flash memory.
- Direct load of a new baud rate.

Flash Magic provides a clear and simple user interface to these features. Under Windows, only one application may have access to the COM part at any one time, preventing other applications from using the COM port when ISP operations are being performed. This means that other applications that need to use the com port, such as debugging the tools, may be used while Flash Magic is loaded.

There are following minimum requirements of the Flash magic

- Windows 95/98/2000/XP/7
- COM port.
- 16 MB RAM
- 3MB disk space.

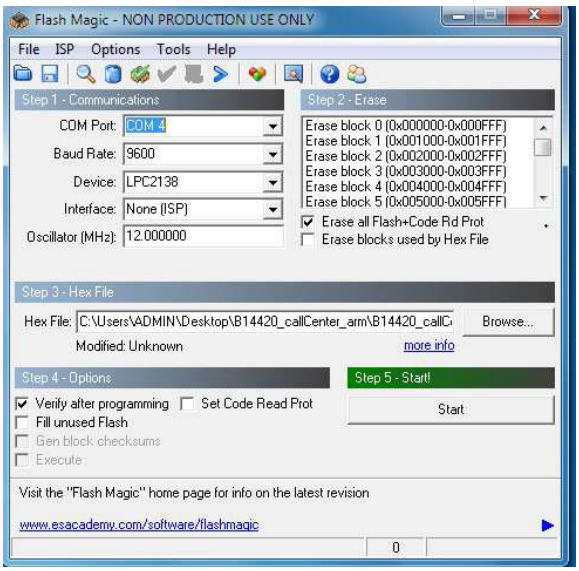

Fig: Flash Magic Window

- ISIS Proteus Design Suit

ISIS proteus design suite is a powerful tool for the electronics design. It is possible to draw a complete circuit for a microcontroller based system and then test it interactively, within a same piece of software. Meanwhile, ISIS retains a host of features aimed at the PCB designer, so that the same design can be exported for production with ARES-PCB Layout software. ISIS provides total control of drawing appearance in terms of line widths, fill styles, colors and fonts.

- Powerful tool for selecting objects and assigning their properties
- Total support for buses including component pins, module ports and wires.
- Net list outputs to suit all popular PCB layout tools.

- Matlab software tool:

The version of matlab tool is R2012a (7.14.0.739). Using Matlab software it is easy to built whole software code.

Schematic:

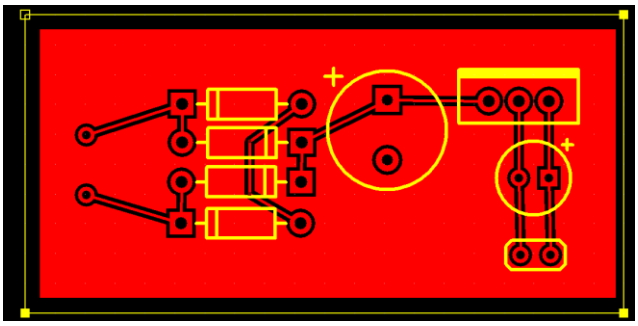

Fig: Circuit diagram of Power supply

Power Supply and Description:

The basic step in the designing of any system is to design the power supply required for that system. The steps involved in the designing of the power supply are as follows,

1) Determine the total current that the system sinks from the supply.

2) Determine the voltage rating required for the different components.

Transformer:

Transformer selection we required 12V for Relay, DC Motor, GSM Modem, GPS etc…...

Here we are using core type transformer with N2:N1 is 12:1.

FORMULA FOR TRANSFORMER

N2/N1 = I2/I1 = V1/V2

As we know input voltages from Mains to transformer are not constant it's varying from 220V to 270V. If we took 15V transformer so the input voltage of transformer is Standard value i.e 230V, but if the Input voltages are varying the required voltages are also varying.

Therefore we assume the highest possible value of Input voltage is 270V so the output voltage is 19V.

The average voltage at the output of a bridge rectifier capacitor filter combination is given by

Vin(DC) = Vm – Idc / 4 f C1

Where , Vm= √ 2 Vs and Vs = rms secondary voltage

Assuming Idc to be equal to max. load current, say 100mA

C = 1000 Gf / 65v , f=50hHz

19 = Vm – 0.1 / 4*50*1000*10^(-6)

19= Vm – 0.1 / 0.2

Vm=19.5 volts

Hence the RMS secondary Voltage

Vrms = vm / √ 2

= 19.5 / √ 2

=19.5 / 1.4421

=13.5219 volts

So we can select a 15v secondary Voltage

Min Input for 7805 is

= Drop across IC 7805 + Required Output voltage

= 3 V+ 5V

= 8 V

So at Input of 7805 we required 8 V with margin

Consider drop across diode 0.7V so 2 diode conducts drop is 1.4 V

= 1.4 V +8 V

= 9.4 V

So at secondary we required 10 V

E0 min/E0 max = (10-0.7) / 10+0.7

= 9.3 / 10.7

θ1 = sin-1 [9.3/10.7]

= 60°

Rectifier:

For bridge

T1 = [time for 90° + time for θ1]

= 5ms + 3.4ms

= 8.4ms

Il = load current supplied to various IC

Il = (O/P current of IC PIC16F877A or ARM-7 + O/P current of IC 232 + Current req. for display)

= 71mA + 30mA + 15.2 mA = 116.2 mA

C = (Il * t1)/Vr

= (116.2 mA * 8.4 ms)/ 1 V

= 976.04 µf

So we select 1000 µf capacitor

For diode design

PIV = Vm

Vm = E0 max + 2 Vf

= 10.7 + 1.4 V

= 12.1 V

I(0) = I(1) /2

= 116.2 mA/ 2

= 58.1 mA

Peak repetitive current

Ifm = [I(1) (t1+t2)]/t2

T2 = time for 90° - time for θ1

= 5ms - 3.4ms

=1.2ms

Ifm = 116.2 mA(8.6ms+1.2ms) /1.2ms.

=833mA

From above specification diode 1N4007 is selected

PIV =100V

I = 1A

a) The TUF is increased to 0.812 as compared the full wave rectifier.

b) The PIV across each diode is the peak voltage across the load = Vm, not 2Vm as in the two diode rectifier

Output of the bridge rectifier is not pure DC and contains some AC some AC ripples in it. To remove these ripples we have used capacitive filter, which smoothens the rippled out put that we apply to 7805 regulators IC that gives 5V DC. We preferred to choose capacitor filters since it is cost effective, readily available and not too bulky.

The value of the capacitor filter can be found by following formula,

$$C = \frac{IL * t}{Vr}$$

C1 (1000 µf / 65v) is the filter capacitor and C2 and C3 (0.1 uf) is to be connected across the regulator to improve the transient response of the regulator.

A regulator is a circuit that supplies a constant voltage regardless of changes in load current. The regulator used in our project is IC7805, which is a three terminal voltage regulator. A heat sink is used, so that the heat produced by the regulator dissipating power has a larger area from which to radiate the heat into the air by holding the case temperature to a much lower value than would result without the heat sink.

IC 7805 has an internal thermal overload protection and the internal short circuit current limiting device.

Fig. Shows the block diagram of a typical power supply. The AC mains are given to the transformer primary to get the required voltage at the secondary. Then it is applied to the bridge rectifier, which converts the sinusoidal input into full wave rectified output. The output of the rectifier contains some ripple voltage. To remove this voltage filter circuit is used. A ripple voltage is nothing but a small value of AC over DC signal. Then a pure DC is given to the regulator. The function of the regulator is to give the constant or stable output DC in spite of changes in the load current.

The reasons for choosing IC regulator is that they are versatile in operation and relatively inexpensive with features like programmable output, current/voltage boosting, internal short circuit current limiting, thermal shutdown.

The 78XX are popularly known for regulation has been used. The 78XX series is a 3-terminal positive voltage regulator and 79XX series is a 3-terminal negative voltage regulator.

As name suggests it transforms the voltage level from one level to another. Transformer used is the step down transformer to step 230 V to +15 V.

It provides isolation too from the mains.

Now we design 3.3V for Microcontroller ARM-7

The formula for calculating the output voltage of ARM is (As given in the datasheet of LM1117)

Formula:-

1.5V = Vin - Vout

Here we know Vin=5V.

So,

1.5V = 5V - Vout

Vout = 5V - 1.5V

= 3.5V.

Therefore we get an o/p of 3.5V, so we are taking from here 3.3V.

V. Applications & Future Scope

ADVANTAGES:

1) As the signaling system is totally based on the density of traffic, so movement of traffic will be smooth.

2) Without waste of time, signaling system will work so waiting time for the people will get decreased, and it will be appropriate.

FUTURE SCOPE:

1) System will make traffic control adaptive but, it needs improvement in case of emergency like ambulance.

2) By using GSM module we can give preference to the emergency road first. To make it we just need GSM transmitter in each ambulance and GSM receiver at every central system for our project.

3) Use of high magnificent quality camera will make system more accurate in case of taking images at night.

4) The present system uses a single camera mounted on a DC motor for monitoring traffic at an intersection. By using a separate camera for each road at an intersection will

allow the system to use video processing which can improve the system efficiency further.

5) The vehicle objects can also be categorized into various classes depending upon the geometrical shape of vehicle for blocking the passage of large vehicles e.g., trucks during day times.

6) The emergency mode can be refined further by installing a GPS receiver in ambulance instead of a GSM engine so that the base station will keep track of the ambulance location on a continuous basis and clear the road whenever will be required.

VI. CONCLUSION

As we know, today's life of human being is just so fast. Everyone is in hurry all the time. So they need proper time management in all fields. It applied on traffic control system also, as it is one of the fields where time management is necessary to make less time consumption of people.

So our proposed system makes traffic system adaptive in nature. By taking the image of road from high quality camera to PC and processing it by mat lab, which is used for image processing. Mat lab will give output image containing density of vehicles on road. According to the density of vehicles ARM processor will allocate variable signaling time for the road.

In this way, this developed adaptive traffic system will reduce time consumption of public at the traffic signal.

VII. REFERENCES

- Ninad Lanke , Sheetal Koul (International Journal of Computer Applications (0975 – 8887) Volume 75– No.7, August 2013).

Smart Traffic Management System. (www.ijcaonline.org)

- P.M. Xavier, Raju Nedunchezhia (IJRET: International Journal of Research in Engineering and Technology (eISSN: 2319-1163 | pISSN: 2321-7308) Volume: 03 Special Issue: 15 | Dec-2014 | IWCPS-2014)

A comparative study on road traffic management systems. (www.ijret.org)

- Farheena Shaikh, Dr. Prof. M. B. Chandak (IOSR Journal of Computer Science (IOSR-JCE) -2014 e-ISSN: 2278-0661, p-ISSN: 2278-8727 PP 24-27)

An Approach towards Traffic Management System using Density Calculation andEmergency Vehicle Alert. (www.iosrjournals.org)

- Osigwe Uchenna Chinyere, Oladipo Onaolapo Francisca, Onibere Emmanuel Amano.(International Journal of Advances in Engineering & Technology, Vol. 1, Issue 5, pp. 47-57 Nov 2011.©IJAET ISSN: 2231-1963)

Design and simulation of an intelligent traffic Control system.

- Songkran Kantawong, Tanasak Phanprasit(International Journal of Information Engineering Sept. 2012, Vol. 2 Iss. 3, PP. 106-115 © American V-King Scientific Publishing - 106)

Vehicle Accident Detection and Identification Using Image Compression Analysis and RFID Traffic Cone Tracking System Module

- Saima Maqbool*, Ulya Sabeel, Nidhi Chandra Rouf-Ul-Alam Bha(Volume 3, Issue 6, June 2013 ISSN: 2277 128X International Journal of Advanced Research in Computer Science and Software Engineering Research Paper)

Smart Traffic Light Control and Congestion Avoidance System During Emergencies Using Arduino and Zigbee. (www.ijarcsse.com)